BLINDER X 1800

QUICK START GUIDE

knog.

WHAT'S IN THE PACK

1.

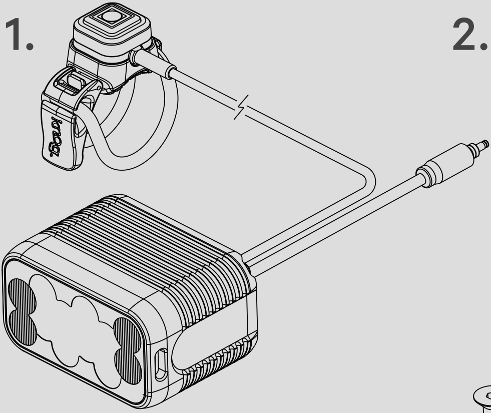

2.

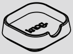

3.

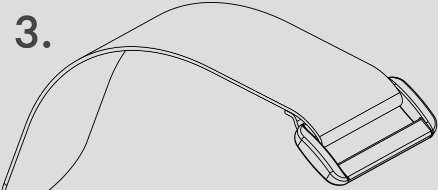

4.

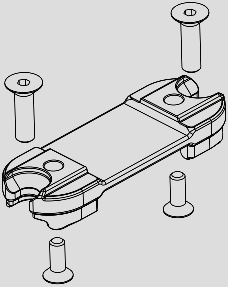

5.

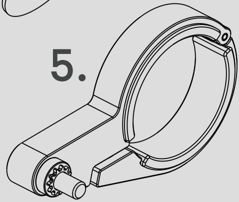

6.

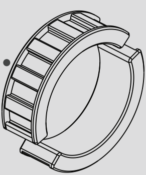

7.

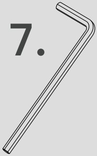

8.

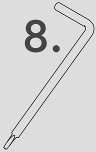

10.

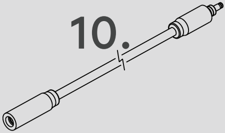

9.

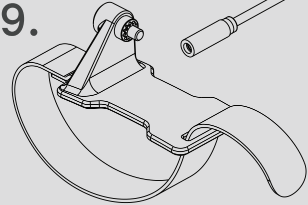

11.

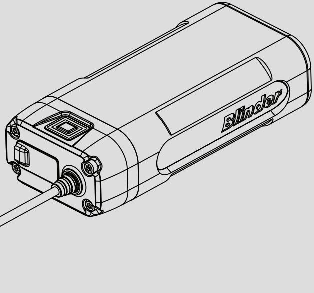

1. BLINDER 1800 LIGHTHEAD & REMOTE
2. HELMET REMOTE MOUNT
3. VELCRO STRAPS 240MM / 300MM
4. FRAME MOUNT & BOLTS
5. BAR MOUNT (PRE-INSTALLED)
6. SHIMS 31.8MM / 35MM (35MM PRE-INSTALLED)
7. HEX KEY
8. TORX SCREWDRIVER
9. HELMET MOUNT
10. EXTENSION CABLE -700MM
11. BATTERY PACK

MOUNTING (BIKE)

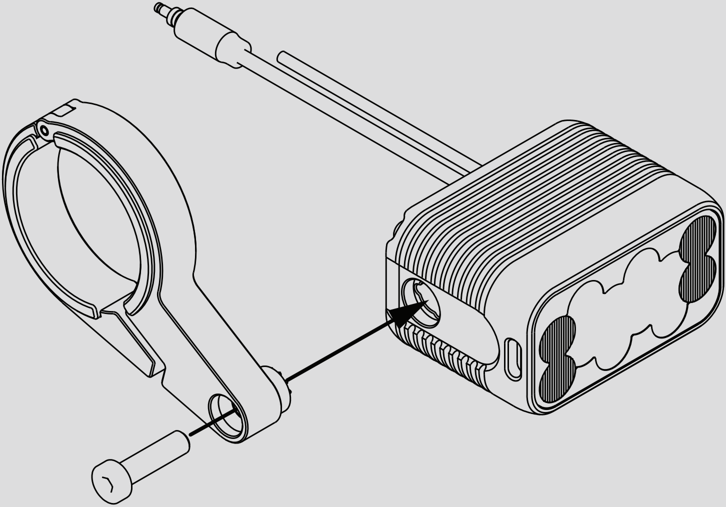

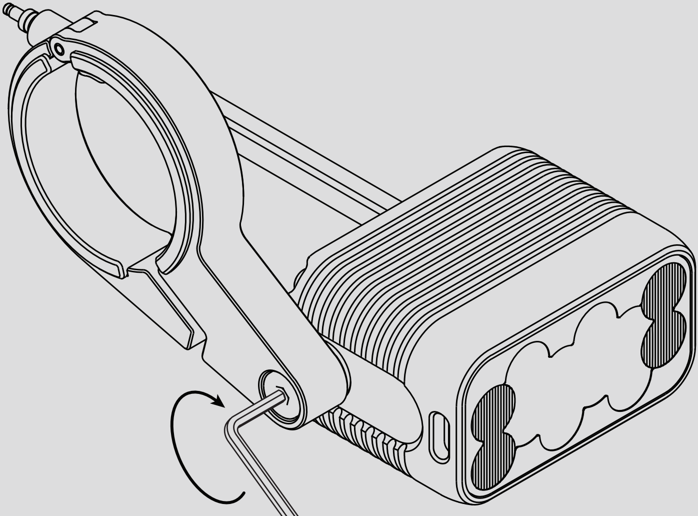

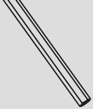

USE THE HEX KEY TO TIGHTEN THE BOLT & SECURE THE BAR-MOUNT TO THE LIGHTHEAD.

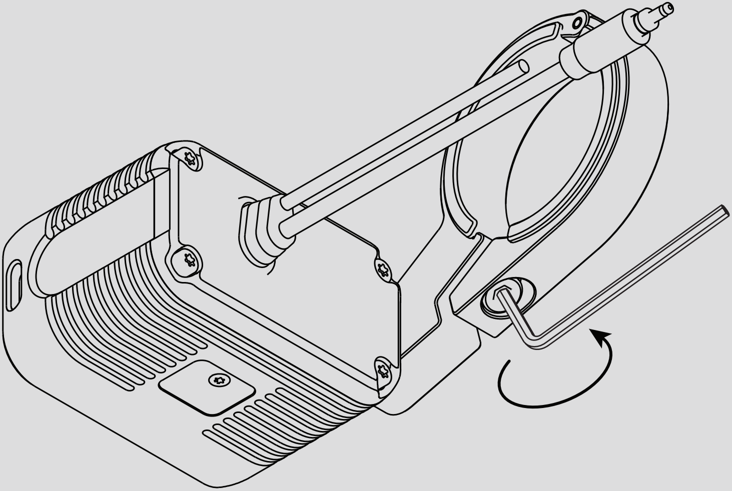

LOOSEN THE BOLT AT THE BASE OF THE BAR-MOUNT & SEPARATE AT THE HINGE.

ENSURE YOU HAVE INSTALLED THE CORRECT SIZED SHIM TO SUIT YOUR HANDLE BAR!

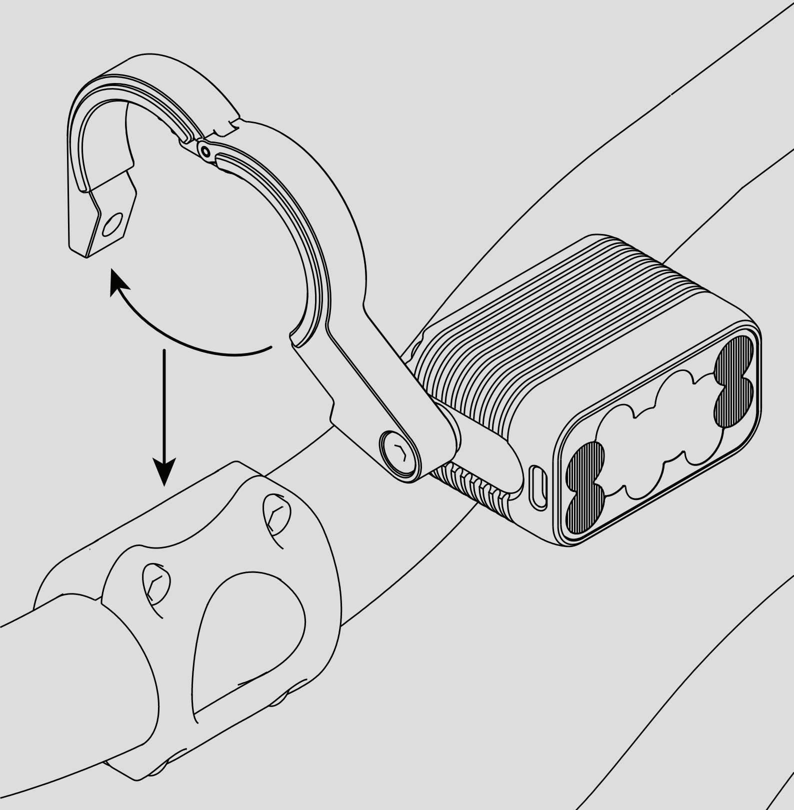

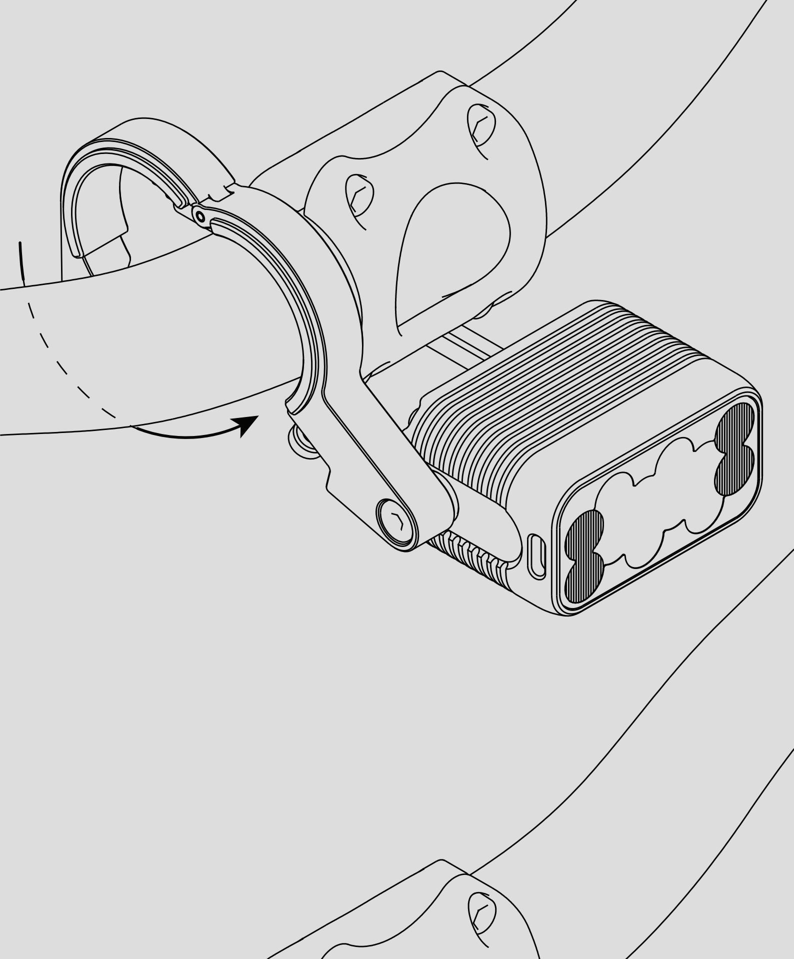

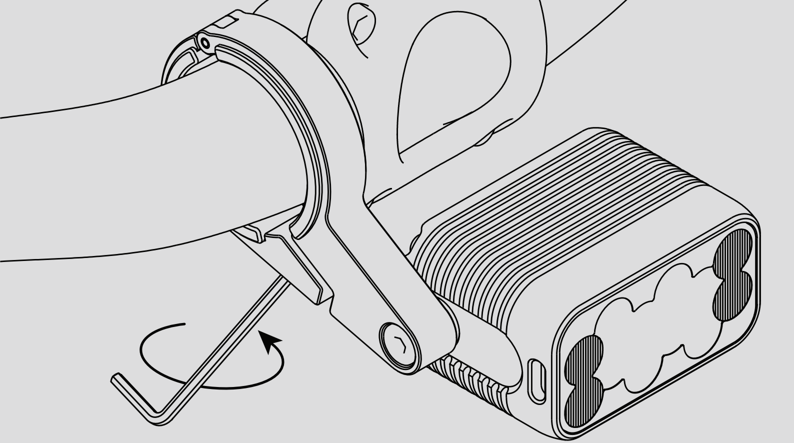

USE THE HEX KEY TO TIGHTEN THE BOLT & SECURE THE BAR-MOUNT TO THE HANDLE-BAR.

ADJUSTING THE BEAM ANGLE

USE THE HEX KEY TO LOOSEN THE BOLT & ROTATE THE LIGHTHEAD TO YOUR CHOSEN ANGLE.

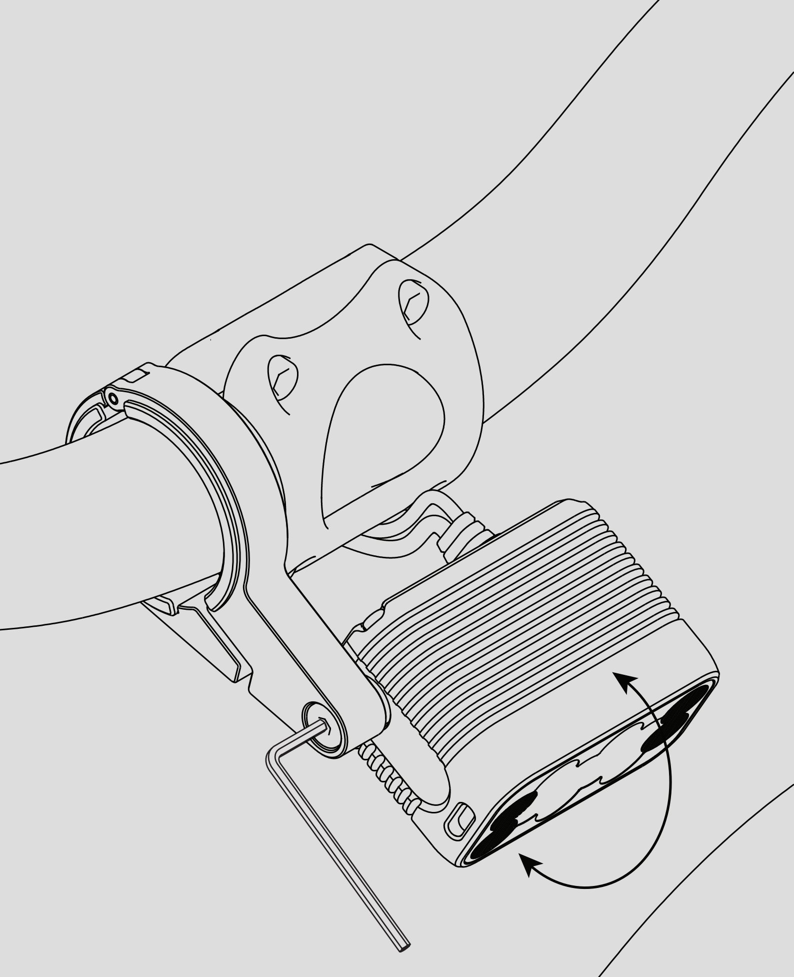

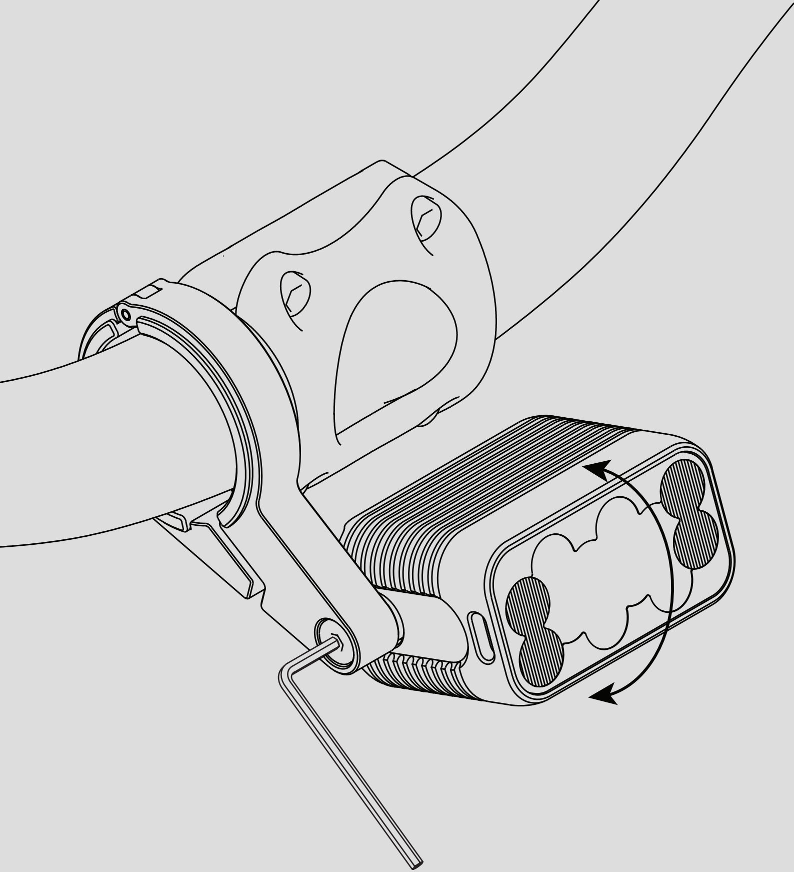

MOUNTING
(REMOTE TO HANDLE-BAR)

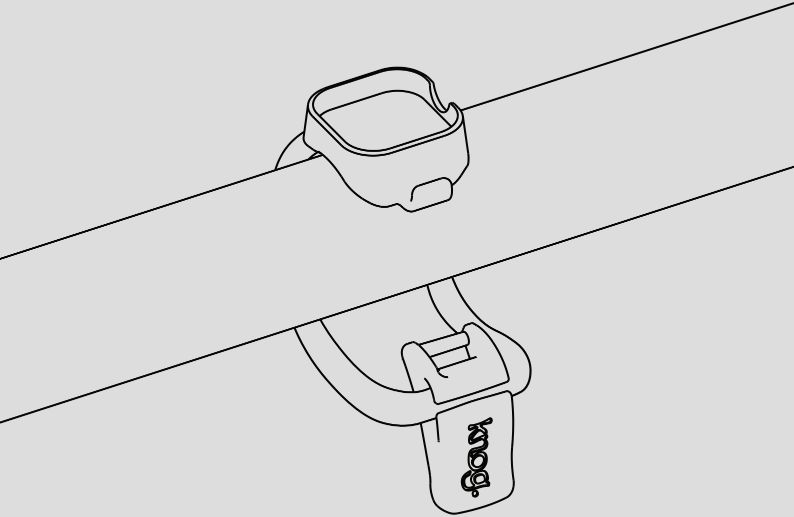

PLACE THE REMOTE MOUNT IN YOUR CHOSEN POSITION.

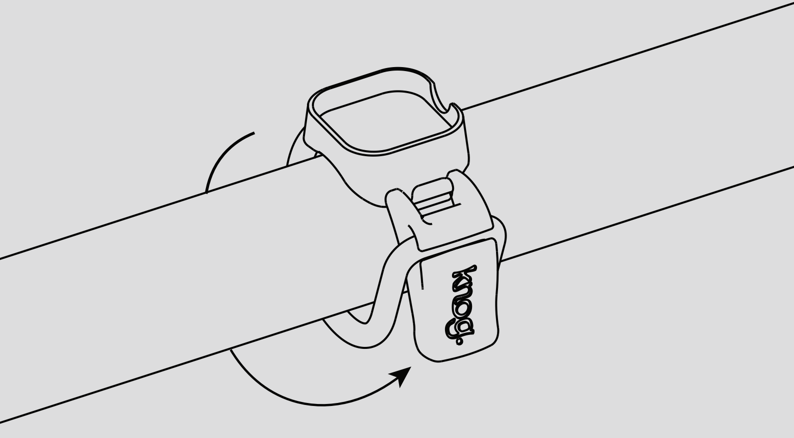

STRETCH THE STRAP AROUND THE HANDLE-BAR & LATCH IT ON TO THE HOOK.

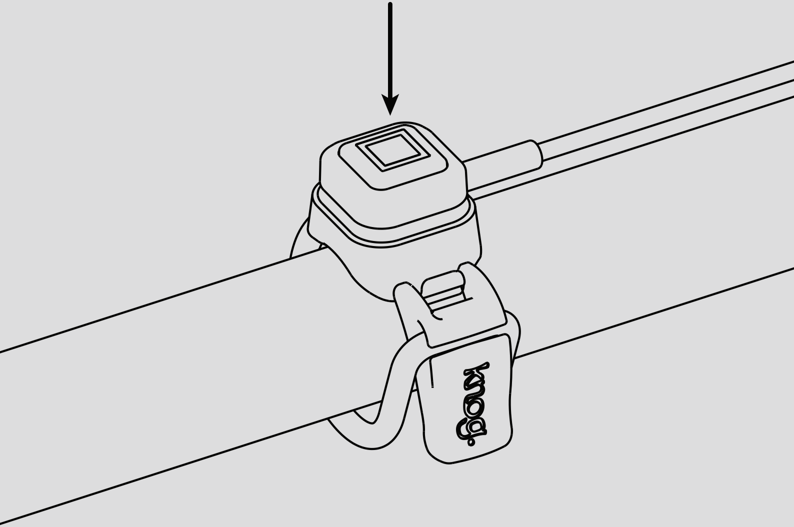

PLACE THE REMOTE INTO THE MOUNT. IT WILL LOCATE & SECURE ITSELF MAGNETICALLY.

MOUNTING (HELMET)

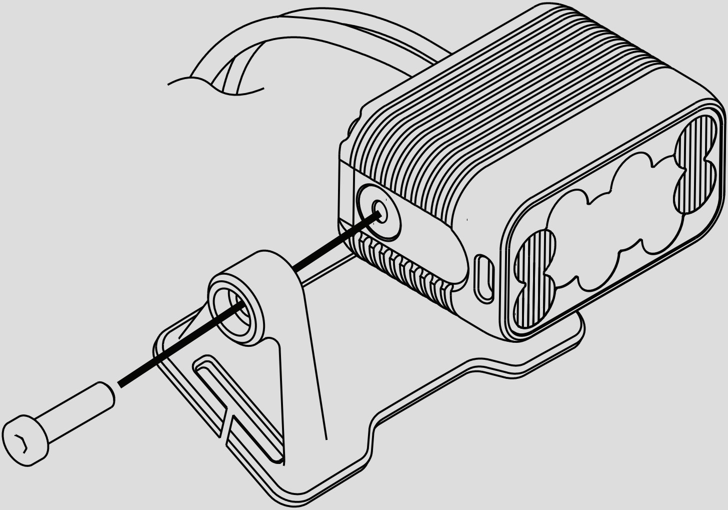

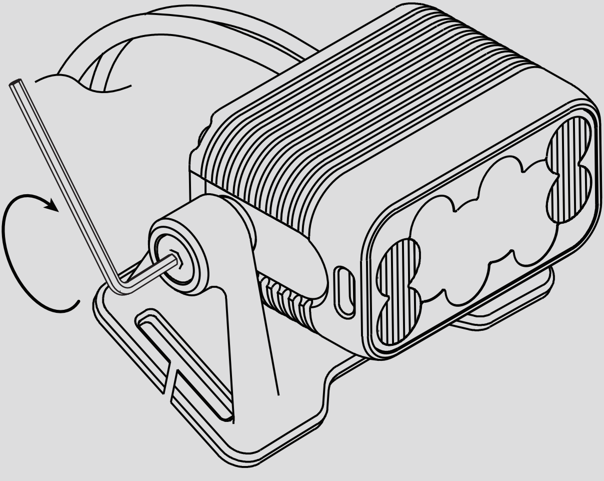

USE THE HEX KEY TO TIGHTEN THE BOLT & SECURE THE HELMET-MOUNT TO THE LIGHTHEAD.

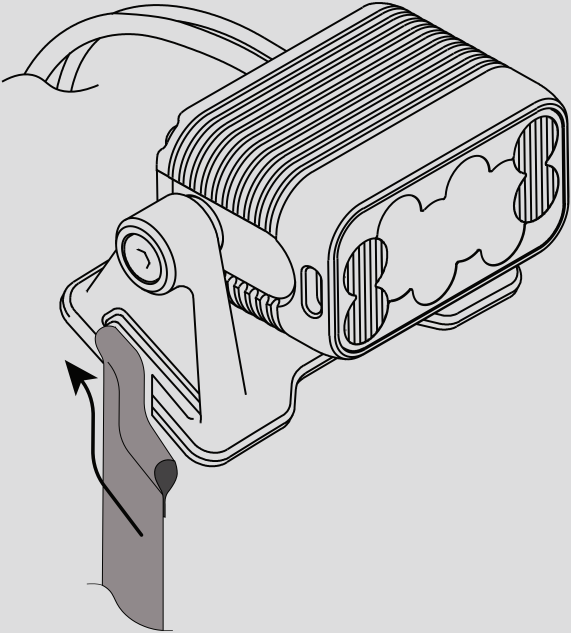

SLIDE ONE EDGE OF THE LOOPED END OF THE HELMET MOUNT STRAP ON TO THE HELMET MOUNT AS SHOWN.

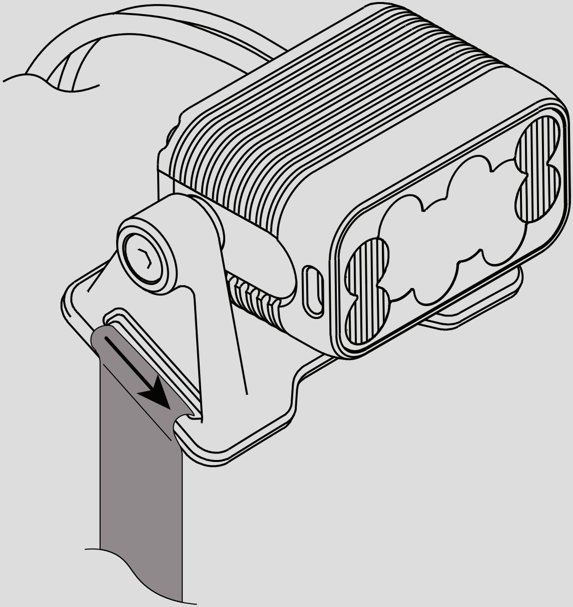

SLIDE THE OPPOSITE EDGE OF THE HELMET MOUNT STRAP ON TO THE HELMET MOUNT AS SHOWN.

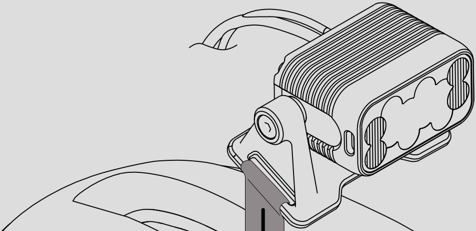

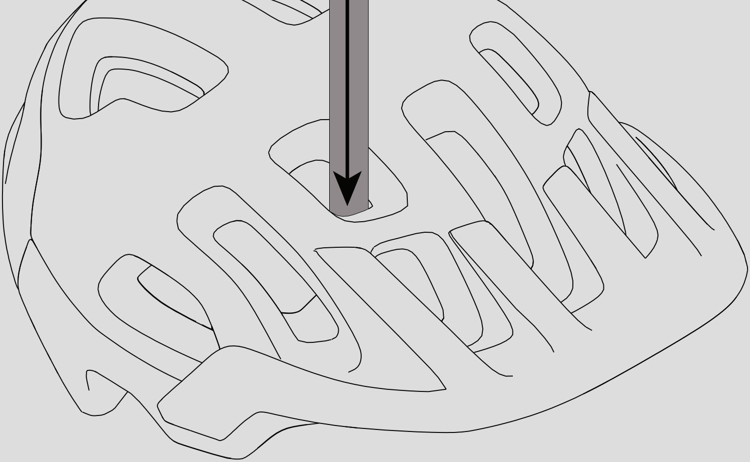

INSERT THE STRAP INTO YOUR CHOSEN HELMET VENT HOLE.

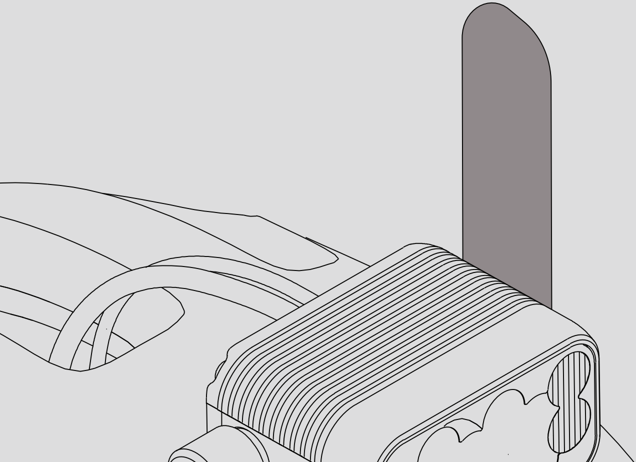

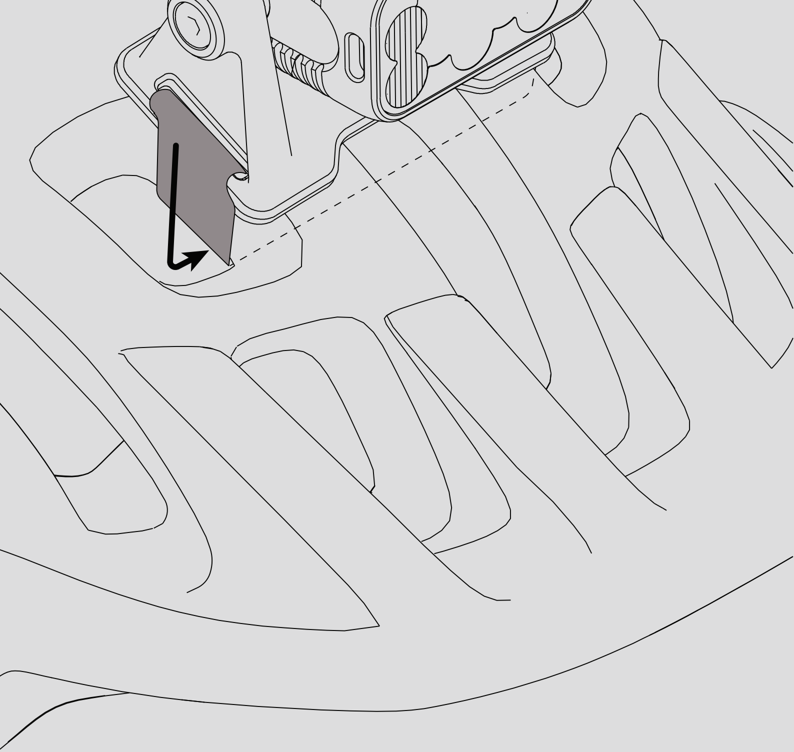

WRAP THE STRAP TIGHTLY UNDER THE VENTS AND INSERT INTO THE SLOT ON THE RIGHT SIDE OF THE HELMET MOUNT.

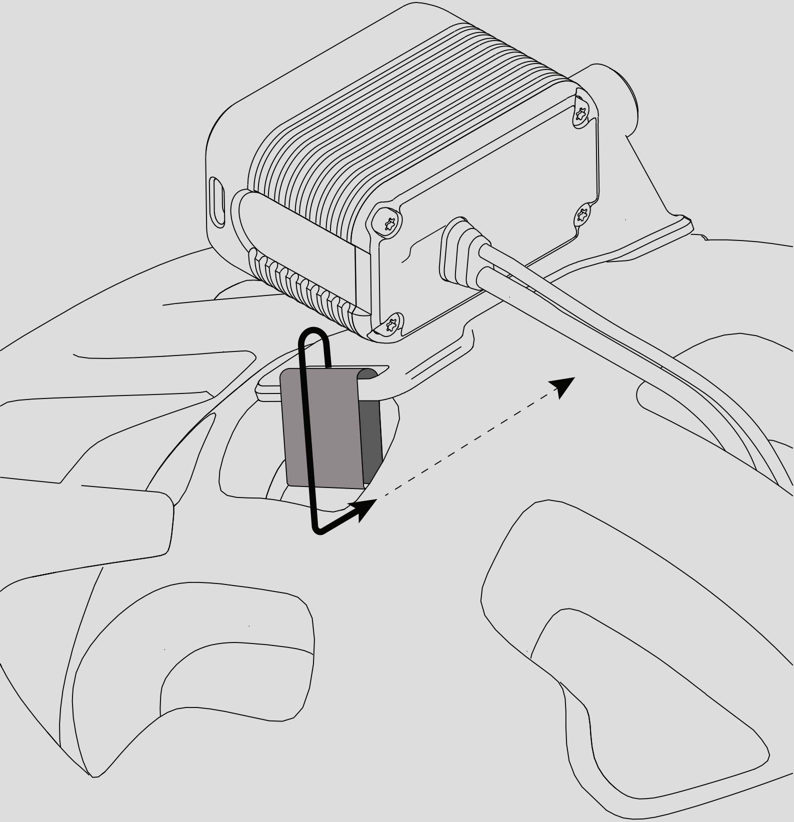

RETURN THE STRAP TO THE INSIDE OF THE HELMET, PULL THE STRAP TIGHTLY AND SECURE BY PRESSING FIRMLY.

MOUNTING (HELMET REMOTE)

PLACE THE REMOTE MOUNT IN A COMFORTABLE POSITION THAT BEST SUITS YOU AND YOUR STYLE OF RIDING.

PRACTICE USING THE REMOTE IN VARIOUS POSITIONS BEFORE ATTACHING.

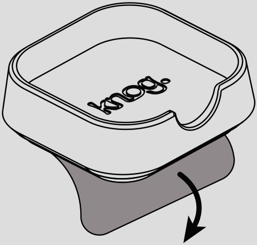

ONCE YOU’VE DECIDED ON THE BEST POSITION, REMOVE THE ADHESIVE BACKING FROM THE MOUNT AND ATTACH TO YOUR HELMET, MAKING SURE THE SEMI-CIRCULAR NOTCH IS FACING THE OPTIMUM DIRECTION FOR THE ROUTING OF THE REMOTE CABLE

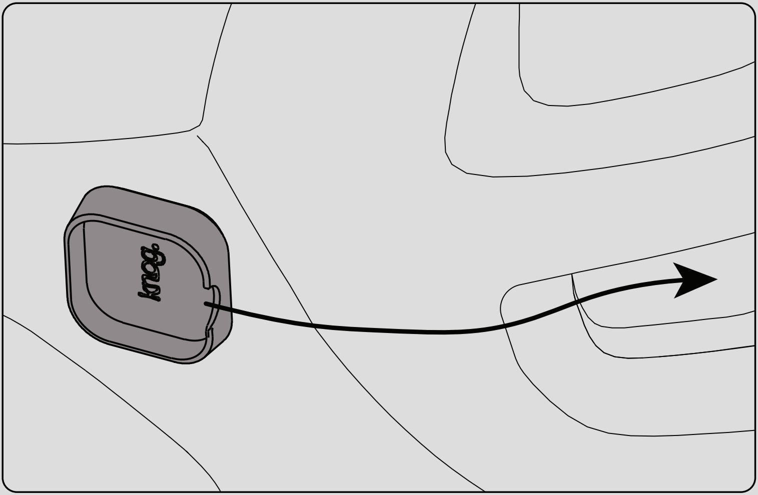

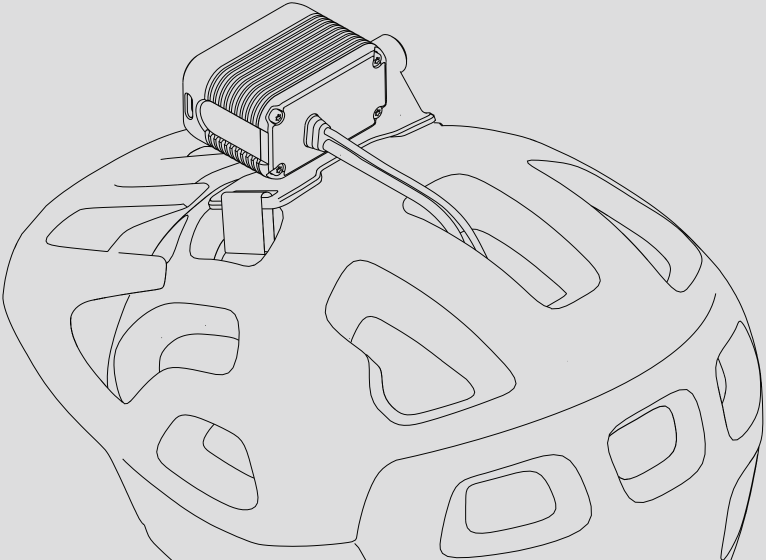

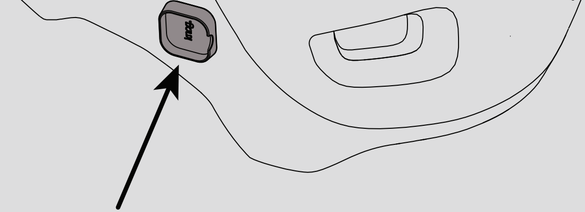

ONCE THE REMOTE MOUNT IS INSTALLED, PLACE THE REMOTE INTO THE MOUNT. IT WILL LOCATE & SECURE ITSELF MAGNETICALLY.

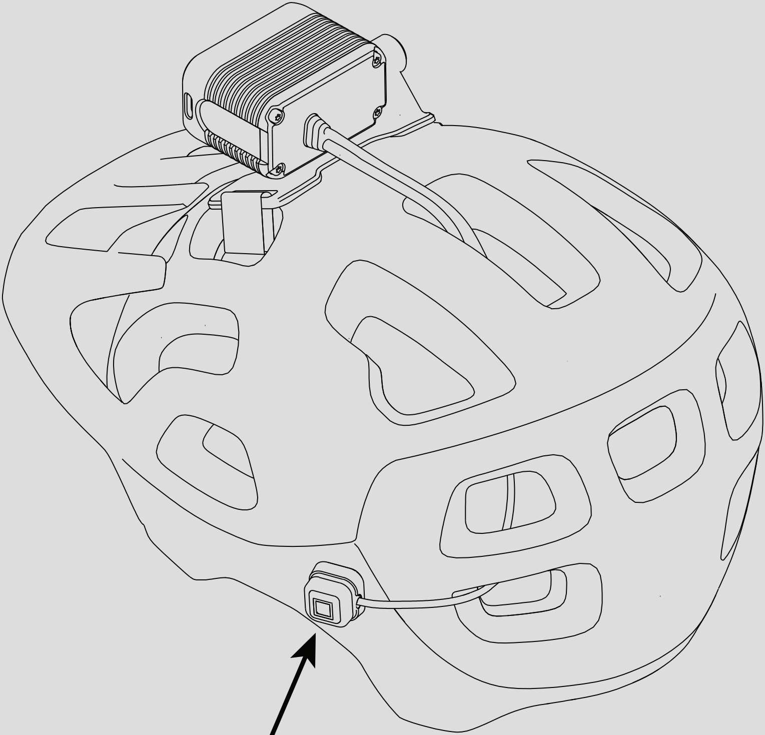

THE HELMET REMOTE MOUNT & REMOTE ASSEMBLY FEATURE A MAGNETIC CONNECTION TO ENCOURAGE A QUICK-RELEASE DETACHMENT IN THE EVENT OF ACCIDENTAL SEPARATION OF THE REMOTE CABLE FROM THE MOUNT.

MOUNTING (BATTERY TO TUBE)

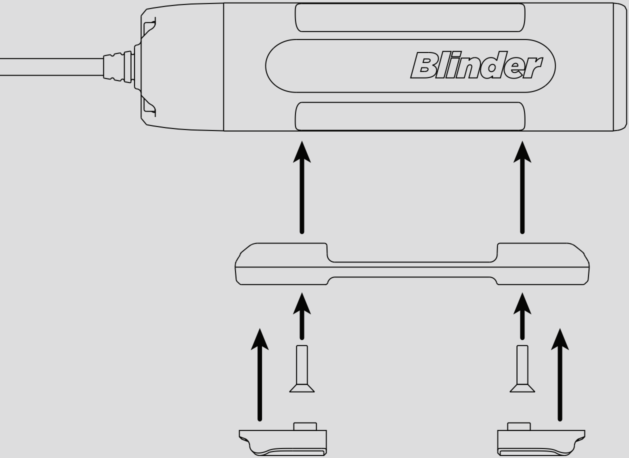

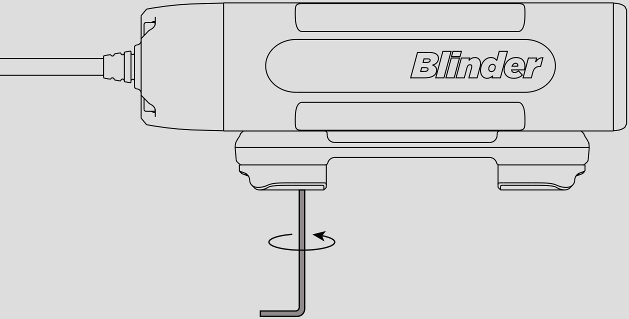

USE THE HEX KEY PROVIDED TO TIGHTEN THE 2 SMALL BOLTS.

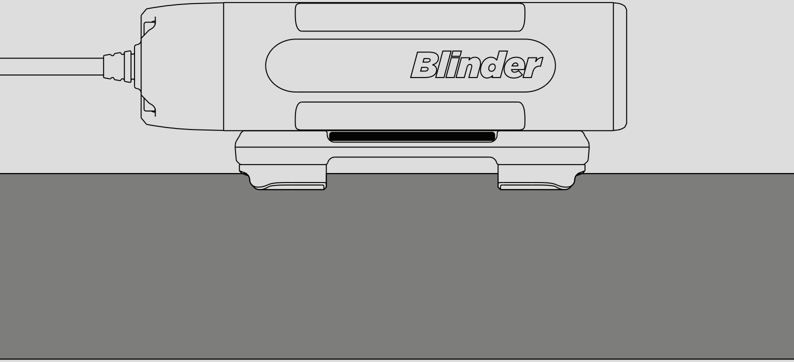

INSERT THE STRAP INTO THE TOP OPENING.

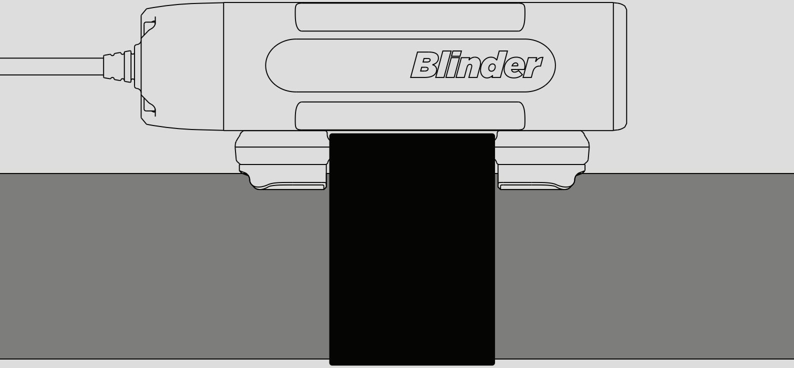

WRAP THE STRAP AROUND THE TUBE AND THROUGH THE BUCKLE. PULL THE STRAP TIGHTLY AND SECURE BY PRESSING THE STRAP TOGETHER FIRMLY.

MOUNTING (BATTERY TO 64MM BOSSES)

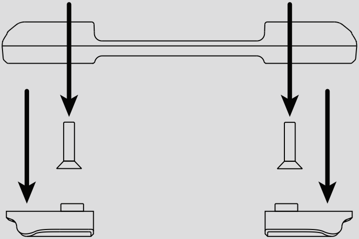

REMOVE THE RUBBER FEET & SET ASIDE THE 2 SMALL BOLTS.

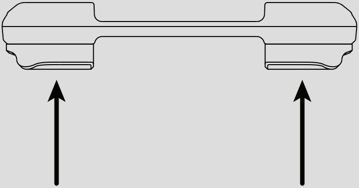

REPLACE THE RUBBER FEET, & PRESS FIRMLY TO ENGAGE.

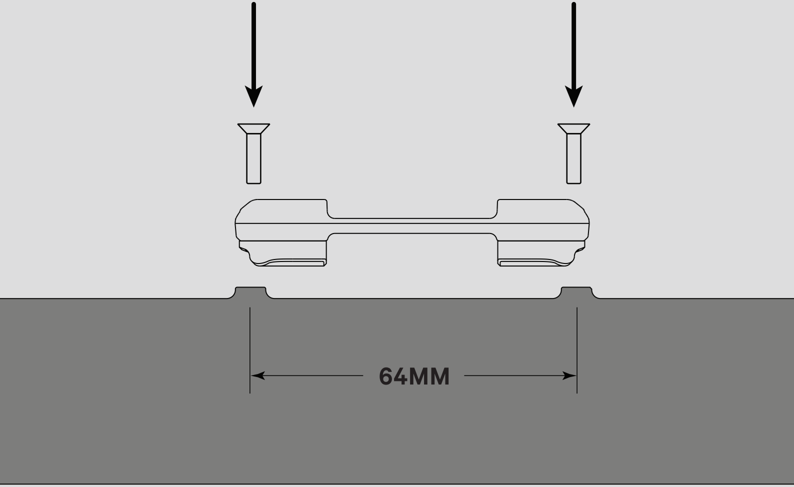

ALIGN THE BATTERY MOUNT WITH THE 64MM BOSSES & INSERT THE BOLTS.

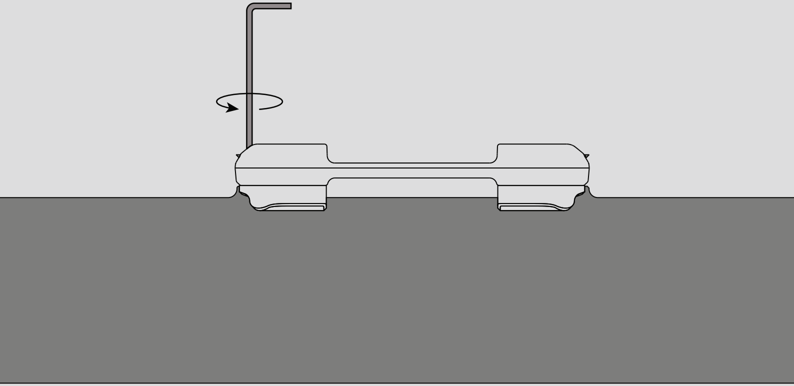

USE THE HEX KEY PROVIDED TO TIGHTEN THE BOLTS.

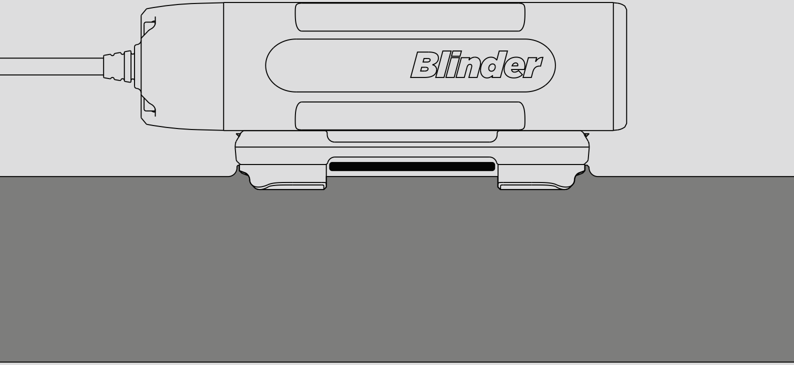

INSERT THE STRAP INTO THE BOTTOM OPENING.

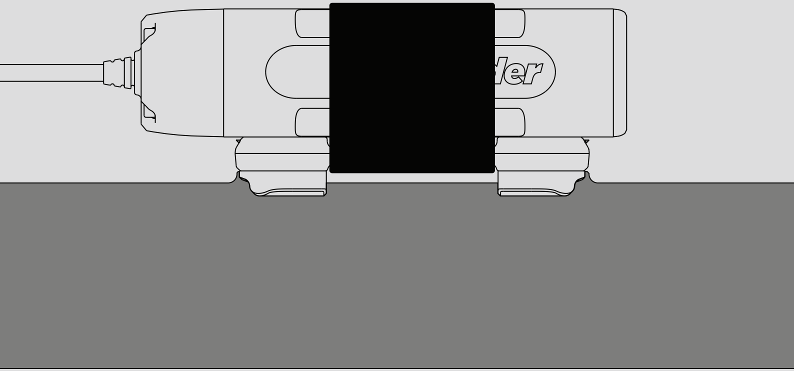

WRAP THE STRAP AROUND THE BATTERY AND THROUGH THE BUCKLE. PULL THE STRAP TIGHTLY AND SECURE BY PRESSING THE STRAP TOGETHER FIRMLY.

OPERATION

BAR & FRAME MOUNTED

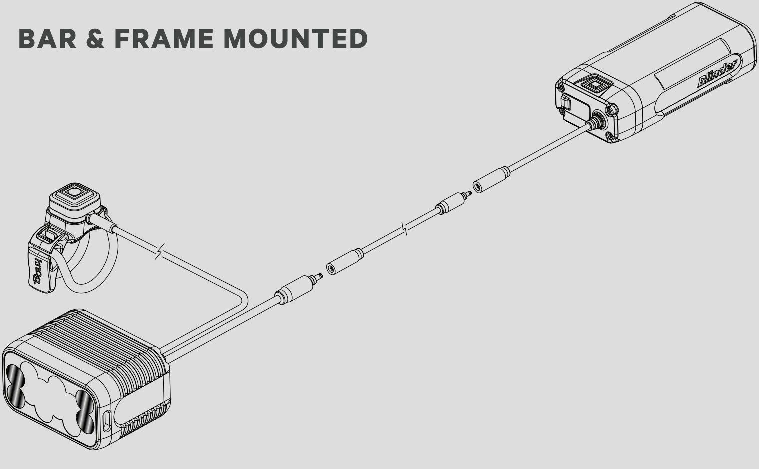

CONNECT THE LIGHTHEAD TO THE BATTERY. USE THE 700MM EXTENSION CABLE IF EXTRA LENGTH IS REQUIRED.

HELMET MOUNTED

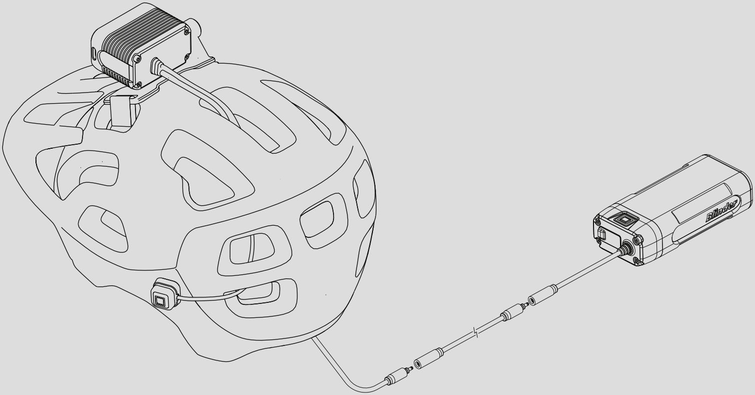

CONNECT THE LIGHTHEAD TO THE BATTERY VIA THE 700MM EXTENSION CABLE.

WHEN USING THE LIGHTHEAD & BATTERY IN THE HELMET MOUNT CONFIGURATION, ALWAYS STOW THE BATTERY SAFELY IN A SECURE BACKPACK OR POCKET.

REMOTE POWER BUTTON

SINGLE PRESS TO POWER ON OR OFF
DOUBLE PRESS TO TOGGLE BETWEEN STEADY & FLASHING MODE BANKS
QUICK PRESS TO ADVANCE TO NEXT MODE

POWER BUTTON

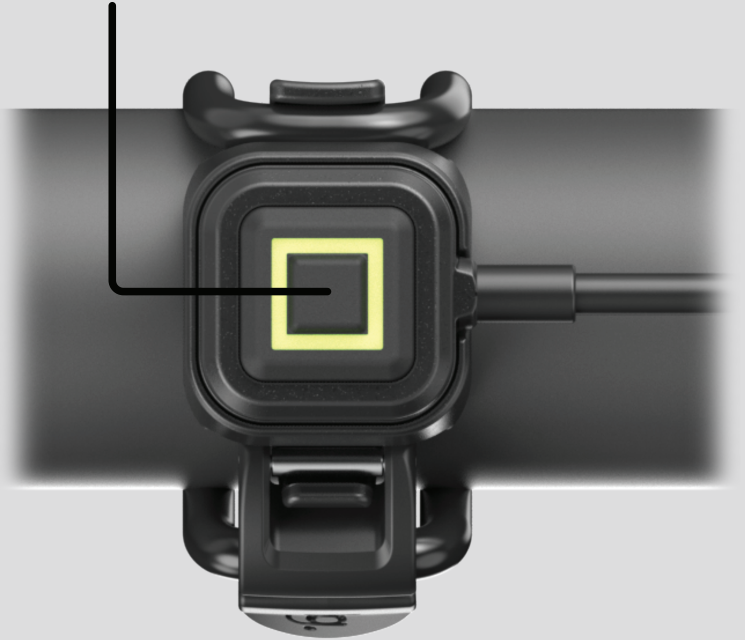

MODE INDICATOR

THE MODE INDICATOR LED WILL SHINE BLUE WHEN THE LIGHT IS IN HIGH MODE. FOR ALL OTHER MODES THE STATUS LED WILL SHINE GREEN.

BATTERY POWER BUTTON

SINGLE PRESS & HOLD TO POWER ON OR OFF
QUICK PRESS TO CHECK BATTERY STATUS.

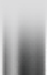

POWER BUTTON

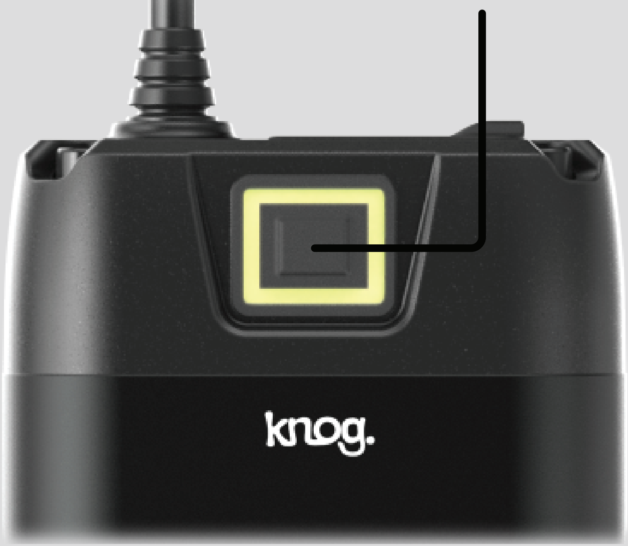

WHEN THE LIGHTHEAD IS TURNED OFF AND THE BATTERY IS STILL CONNECTED, THE BATTERY WILL ENTER SLEEP MODE AFTER 10-20 SECS.

THE BATTERY WILL AWAKEN FROM SLEEP MODE & WILL DISPLAY THE BATTERY STATUS WHEN THE LIGHTHEAD IS POWERED BACK ON .

CHARGING

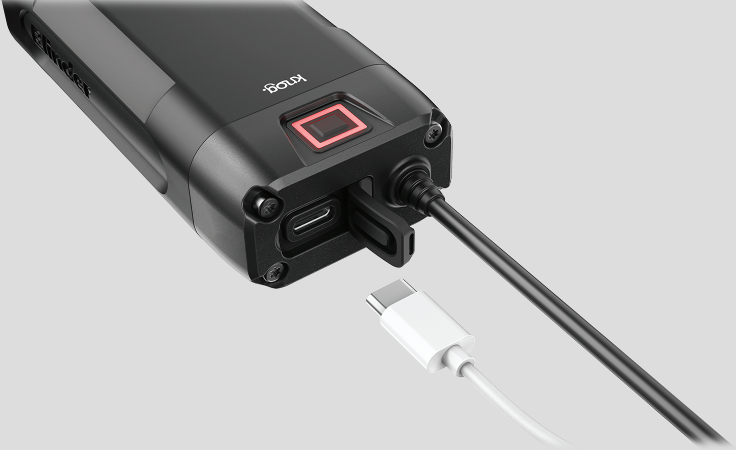

LIFT THE CHARGING-PORT HATCH & INSERT A USC TYPE C CHARGING CABLE.

⚠

ALWAYS USE A STANDARD WALL CHARGER WHEN CHARGING.

BATTERY CHARGING STATUS

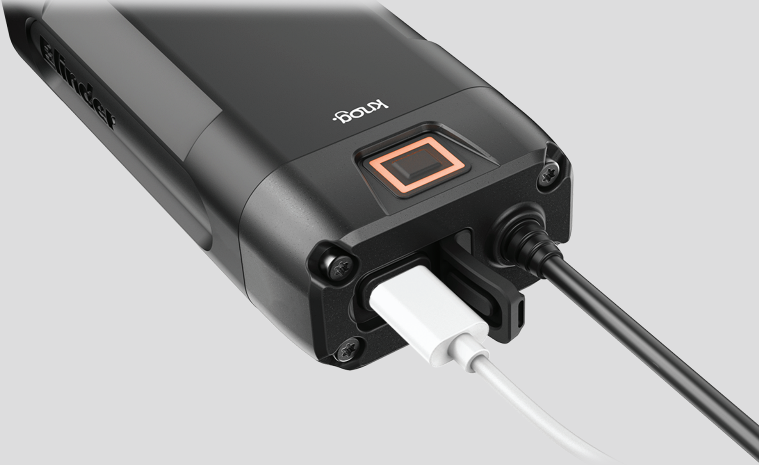

ONCE THE CHARGE CABLE IS INSERTED, THE POWER BUTTON WILL FLASH AMBER INDICATING THE LIGHT IS NOW IN CHARGING MODE.

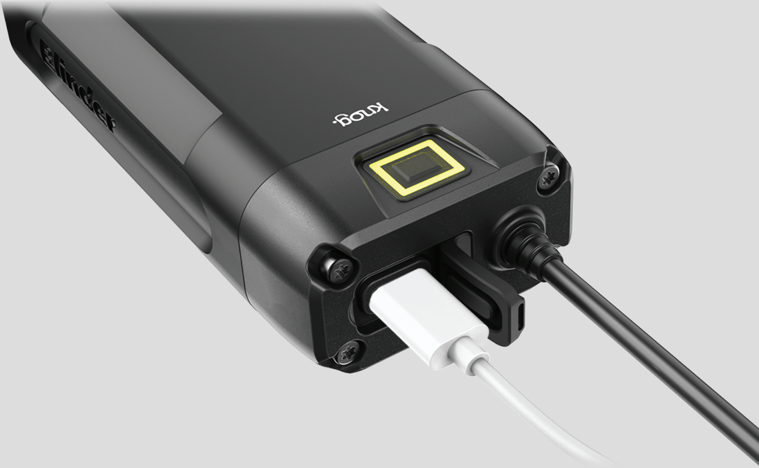

ONCE FULLY CHARGED, THE POWER BUTTON WILL GLOW GREEN. AFTER 1 MINUTE THE GREEN LIGHT WILL TURN OFF.

*BATTERY CHARGE TIME

TYPICALLY 3.5HRS FROM USB-C PD CHARGER @ 9VDC (1.67A) OR 12VDC (1.25A) IN AMBIENT TEMPERATURE RANGE 15°C TO 30°C TYPICALLY 6.5HRS FROM A 5V (2.1A) USB-A CHARGER IN AMBIENT TEMPERATURE RANGE 15°C TO 30°C. CHARGE TIME MAY BE LONGER FROM A LOW POWER CHARGING SOURCE SUCH AS A PC USB PORT (UP TO 20HRS) CHARGING TIME WILL BE EXTENDED BELOW 10°C, AND CHARGING WILL BE HALTED BELOW 0°C.

BATTERY STATUS

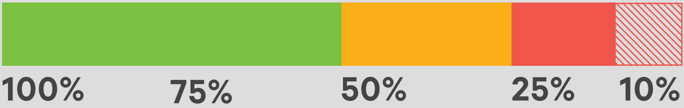

A QUICK PRESS OF THE POWER BUTTON WHEN THE BATTERY IS SWITCHED OFF WILL INDICATE THE BATTERY CHARGE STATUS.

WHEN THE POWER BUTTON LIGHT IS FLASHING RED, THE LIGHT & BATTERY'S OUTPUT WILL BE REDUCED TO 30% TO PRESERVE RUNTIME. A BRIEF FLICKER OF THE LIGHTHEAD'S BEAM WILL ALERT THE USER THAT LIGHTHEAD & BATTERY HAVE ENTERED BATTERY PRESERVATION MODE.

MODES

MODE	LUMENS	RUNTIME
High	1800	2.5hr
Medium	800	6.5hr
Low	350	15hr
Pulse	900	12hr
Strobe	900	12hr
Eco	650	75hr

DESIGNED BY KNOG
MELBOURNE, AUSTRALIA

2 YEAR WARRANTY

KNOG.COM